Available online at www.sciencedirect.com
ScienceDirect
Proceedings of the Combustion Institute 33 (2011) 767–774
Proceedings of the Combustion Institute
www.elsevier.com/locate/proci

Development of high-repetition rate CH PLIF imaging in turbulent non-premixed flames

Naibo Jiang, Randy A. Patton, Walter R. Lempert, Jeffrey A. Sutton *

Department of Mechanical Engineering, The Ohio State University, Columbus, OH 43210, USA

Available online 1 September 2010

Abstract

We report on the development of high-repetition rate planar laser-induced fluorescence (PLIF) imaging of the CH radical in turbulent flames. This paper presents what the authors believe to be the first multi-frame, high-speed CH PLIF image sequences captured in a turbulent non-premixed jet-flame. The high-repetition rate CH PLIF measurements were made using a combination of a custom pulse burst laser system operating at a 10-kHz repetition rate, an in-house optical parametric oscillator (OPO) with frequency mixing for 390-nm laser pulse generation, and a high-framing rate ICCD camera for high-speed image capture. The 1064-nm output of the pulse burst laser is frequency-tripled (355 nm) and used to pump the OPO, which can be operated in a narrow bandwidth (300 MHz) or broadband (4 cm^{-1}) mode. The OPO system produces a burst of laser pulses near 615 nm, which can be subsequently mixed with residual 1064-nm output from the pulse burst laser to generate a series of 390-nm pulses separated by less than 100 μs. The tunable ultraviolet output around 390 nm is then used to excite the B–X (0, 0) band allowing high-speed image sequences of the CH radical to be acquired from the B–X(0, 1), A–X(1, 1), and A–X(0, 0) bands near 430 nm. In this paper, we present results using the narrow bandwidth mode of the laser. By injection seeding the OPO with a single-frequency diode laser, we can obtain spectrally-narrow output at 390-nm, which allows imaging of CH with only 0.4 mJ/pulse of laser energy. Ten-kilohertz-CH PLIF image sequences from a turbulent non-premixed flame are reported as an example of the potential of this diagnostic system. Although, the signal-to-noise ratio (SNR) is marginal, we discuss future improvements to the system to increase the SNR to levels comparable to that achieved with traditional low-repetition rate systems.
© 2010 The Combustion Institute. Published by Elsevier Inc. All rights reserved.

Keywords: CH PLIF; Pulse burst laser; OPO; Turbulent non-premixed flames; High-speed diagnostics

1. Introduction

The CH radical has long been considered an appropriate marker of the inner reaction zone in both non-premixed and premixed hydrocarbon flames since its location marks the final step in hydrocarbon fuel decomposition (e.g., [1–4]). The narrow spatial profile of the CH radical is well correlated with flame location and heat-release rate (e.g., [2,4]) and its disappearance has been shown to correlate strongly with flame extinction (e.g., [2,3]). Previous turbulent combustion studies have used the CH layer obtained from planar laser-induced fluorescence (PLIF) diagnostics to visualize and investigate turbulence–chemistry interactions including flame wrinkling,

* Corresponding author. Address: Department of Mechanical Engineering, The Ohio State University, 201 W. 19th Ave., Columbus, OH 43210, USA. Fax: +1 614 292 3163.
E-mail address: sutton.235@osu.edu (J.A. Sutton).

1540-7489/$ - see front matter © 2010 The Combustion Institute. Published by Elsevier Inc. All rights reserved.
doi:10.1016/j.proci.2010.05.080

flame propagation, flame liftoff and stabilization, and flame response from unsteady fluid mechanics. All of the previous studies have relied on single- or double-pulsed realizations of the CH radical due to the low-repetition rates of commercial laser systems (10 s of Hz). In this aspect, the reaction zone behavior (as identified from the CH layer) is qualified by a series of temporally-uncorrelated instantaneous images.

However, turbulent combustion is non-periodic and is characterized by a time-dependent coupling between turbulent fluid mechanics and finite-rate flame chemistry. Because turbulent combustion processes are highly transient, information is needed that is resolved in *both space and time*. This requirement dictates that the imaging of multi-dimensional scalar fields such is at much faster rates than typical characteristic time-scales of the turbulent processes (>>1 kHz). This is especially important for combustion radicals such as CH that serve as markers for the primary reaction zone since processes such as flame extinction and re-ignition are not statistically stationary and cannot be characterized properly by statistically-uncorrelated measurements. In order to monitor the evolution of the reaction zones using CH PLIF diagnostics, multiple images must be recorded sequentially and the time between images must be small enough such that the images are temporally correlated.

Currently, there are few reported studies of high-speed imaging in combustion environments and even these have been limited to diagnostic applications such as particle imaging velocimetry (PIV) and OH PLIF, which require low individual pulse energies. The scarcity of experiments detailing the temporally-evolving nature of turbulent flames has been severely constrained by the lack of available laser technology. As an example, CH PLIF imaging typically is performed by using a high-energy, pulsed laser to pump a dye laser to generate 390 nm directly or to generate tunable visible radiation that may be subsequently converted to the desired UV output via frequency-doubling or sum-frequency mixing. Commercially-available high-energy laser systems including Q-switched Nd:YAG or excimer lasers are limited to pulse repetition rates of 10 to 300 Hz, while commercially-available high-repetition-rate lasers such as Nd:YLF, Nd:YVO_4, and copper vapor lasers are limited to low pulse energies (<10 mJ). While high-speed PIV measurements require only modest pulse energies due to high signal levels from the Mie scattering of seeded particles, scalar measurements are much more complicated. Because of the low pulse energies available from commercial high-repetition rate laser systems and the difficulties of pumping conventional dye laser systems at high-repetition rates, only OH PLIF (due to its high concentrations in flames) has been successfully demonstrated for continuous, real-time, multi-dimensional monitoring of a reactive scalar.

Recently, continuous high-speed imaging of the OH radical using a frequency-doubled, Nd:YLF-pumped dye laser operating at 282 nm has been demonstrated (e.g., [5–9]). To date, measurements using these laser systems have been limited to repetition rates less than 10 kHz to avoid photobleaching and triplet-state population of the organic dye. Furthermore, because of a trade-off in repetition rate and pulse energy, the systems typically are operated at lower repetition rates such at 5 kHz to achieve suitable pulse energies (~100 μJ/pulse) for OH PLIF. As a note, it will be shown later in this paper that this level of pulse energy is much too low for CH PLIF imaging. Paa et al. [10] used a frequency-tripled Yb:YAG at 343 nm to excite "hot bands" of the OH radical at 1 kHz. Even though this experimental system is straightforward (one laser), the transition probability of the (0, 1) transition is 100 times lower than the (1, 0) band at 283 nm, negating the higher achievable pulse energies compared to the frequency-doubled, Nd:YLF-pumped dye laser systems described.

As an alternative to a continuous duty cycle, previous authors have demonstrated the ability to generate a limited number of high-energy pulses at high-repetition rates. Initial work at Lund consisted of "clustering" conventional Nd:YAG-pumped dye laser systems and ICCD camera technology to capture eight sequences of the OH concentration fields via PLIF (e.g., [11–13]) in turbulent non-premixed flames during transient events such as ignition and local flame extinction. Starting with 270 mJ per individual pulse at 532 nm, they were able to generate eight pulses at 282 nm, with average pulse energy of 1 mJ and a minimum inter-pulse period of 125 μs, constrained by the high-intensity pumping requirement of the dye laser. Recently, Sjoholm et al. [14] used the same laser system to pump an optical parametric oscillator (OPO) system instead of a dye laser and frequency-double the output for OH PLIF measurements. Although the OPO system overcomes the inter-pulse spacing limitation imposed by the dye laser, an additional limitation of this "clustered" approach is the number of output pulses available; simply put, increasing the record length of the image sequence requires additional laser sources, which quickly becomes cost prohibitive.

Another well-known approach to making high-speed measurements (over a limited duty cycle) is what has become known as "pulse burst mode". Wu et al. [15] demonstrated the first generation of this type of "pulse burst" by amplifying a low-power continuous wavelength (cw) laser using a conventional flashlamp-pumped amplifier and then forming this one long pulse into a burst of pulses through a pockels cell slicer, followed by additional amplifier stages. Subsequently, Lempert and coworkers [16] and Thurow et al. [17] have developed effective second and third genera-

tions, both extending the burst duration to >1.5 ms and increasing the pulse energies to levels suitable for spectroscopic measurements. As an example, Miller et al. [18] acquired 20 temporally correlated OH PLIF images at a 50 kHz acquisition rate in a turbulent hydrogen–air diffusion flame.

In this paper, we will describe the use of pulse burst technology to produce a series of high-energy laser pulses at 1064 and 355 nm that can be used to pump a custom OPO to ultimately generate a series of UV laser pulses at 390 nm with sufficient pulse energies for high-speed (10 kHz) CH PLIF imaging. Specifically, we demonstrate, for the first time to the authors' knowledge, temporally correlated sequences of CH PLIF images in a turbulent non-premixed flame. Such diagnostic capabilities will prove invaluable in investigating turbulent flame dynamics in general and specifically highly transient events such as flame extinction and re-ignition.

2. Experimental details

2.1. Pulse burst laser system

The pulse burst laser system at Ohio State, shown schematically in Fig. 1a, has been described in detail previously in Ref. [16] and thus will only be described briefly here. The laser system is a master oscillator, power amplifier (MOPA) design, which consists of a frequency-tunable ($\sim$1 cm^{-1}), single-frequency (10^{-3} cm^{-1}) cw diode-pumped ring laser operating at 1064 nm serving as the primary oscillator, an electro-optic dual pockels cell pulse slicer, and a series of flashlamp-pumped Nd:YAG amplifiers. The cw laser is initially pre-amplified in a double-pass variable pulse width (0.3–2.0 ms) flashlamp-pumped amplifier. The Nd:YAG amplifier rod is 100 mm in length by 6.4 mm in diameter, and is wedged at two degrees to mitigate self lasing. The resulting smooth pulse is formed into a "burst" of laser pulses by rapidly rotating the polarization of the pre-amplified pulse by one of two pockels cells as described by Wu et al. [15]. This slicing process creates a train of 10-ns wide pulses, which have pulse energies on the order of 10^{-9} J and can have inter-pulse separations as short as 1 μs (1-MHz repetition rate). In the current work, pulse separations are set to 100 μs, corresponding to a repetition rate of 10 kHz. The pulse train is then further amplified by a series of four additional flashlamp-pumped Nd:YAG amplifiers with 6.4, 6.4, 9.0, and 12.7 mm diameter (100 mm long) Nd:YAG rods. This laser system has previously generated greater than 400 mJ/pulse at 1064 nm at repetition rates exceeding 20 kHz [16,19] corresponding to a system gain of 10^8. In the current work, the individual pulse energies are limited to 130 mJ at 1064 nm (40 mJ at 355 nm) in order to prevent damage to the BBO crystals used in the OPO as described below. Finally, it should be noted that the pulse bursts currently are limited to a total duration of 2 ms, which only is dictated by the flashlamp-pumped amplifier power supplies. However, the system can be extended to longer pulse durations with alternative power supplies which output a longer flashlamp pulse. This represents an area of flexibility that is not afforded in "clustered" laser systems.

To reduce amplified spontaneous emission (ASE) buildup in the system, a phase conjugate mirror (PCM) is placed between amplification stages 3 and 4 [16]. The PCM is an optical cell filled with a high index-of refraction liquid (e.g., FC-75) that uses the principle of stimulated Brillouin scattering (SBS) to essentially act as an intensity filter and break the unwanted ASE growth. In addition, the SBS PCM eliminates the low-intensity pedestal which is superimposed on the desired pulse burst sequence due to the finite on/off contrast ratio of the pockels cell pulse slicer. If the pump beam intensity is above a minimum threshold, a coherent beam is backscattered at 180°. In this manner, the desired high-intensity laser burst is backscattered toward the final amplifier stages, while the sources of low-intensity background (e.g., ASE) do not exceed minimum threshold and pass through the PCM cell

2.2. High-speed CH PLIF imaging

As in our previous work [16,19], the fundamental output at 1064 nm is converted to second (532 nm) and third (355 nm) harmonic wavelengths using a pair of non-critically phase matched Type I LBO crystals. The 355-nm output is then used to pump a custom injection-seeded OPO as shown in Fig. 1b and described in Ref. [19] and similar to the configuration used in Ref. [18] for OH PLIF imaging. The OPO consists of an optical resonator and a gain medium that converts the pump beam at frequency ω_p into two output waves (signal and idler) of lower frequency, ω_s, ω_i, where the sum of the output frequencies is equal to that of the input frequency, $\omega_s + \omega_i = \omega_p$. The nonlinear optical interaction of these three waves leads to amplification of the signal and idler waves and de-amplification of the pump wave. For 355 nm pumping, the OPO gain medium consists of a pair of type I BBO crystals, oriented in a linear cavity configuration. The BBO crystals are placed inside of a cavity consisting of a high reflector ($R \sim 1$) and an output coupler ($R \sim 0.2$) coated for operation in 600–900 nm region. As shown in Fig. 1b, the 355-nm pump beam can be coupled into the cavity simultaneously with the single-frequency output of an external-cavity diode laser (ECDL) operating at the prescribed idler wavelength. The ECDL is used to injection seed the cavity, resulting in a nar-

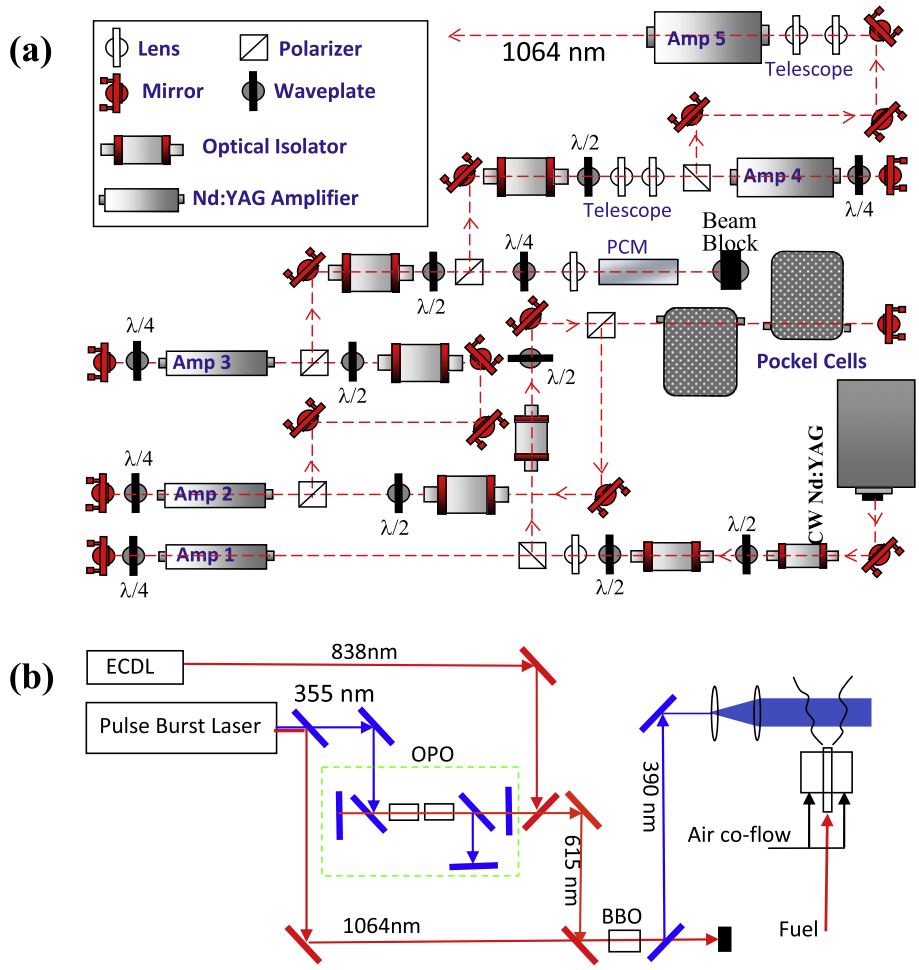

Fig. 1. (a) Schematic diagram of pulse burst Nd:YAG laser at OSU. (b) Experimental setup for high-speed CH PLIF imaging highlighting 10-kHz 390-nm pulse generation using pulse burst laser-pumped OPO.

row linewidth output (~300 MHz) suitable for spectroscopic studies. To obtain higher conversion efficiencies and better output beam quality, the 355-nm pump beam is double-passed through the OPO cavity.

In order to generate a burst of laser pulses near 390 nm for CH PLIF imaging, we sum-frequency mix residual 1064-nm output from the pulse burst laser with an OPO signal output near 615 nm. For the injection-seeded measurements used in this work, the ECDL was tuned to an idler wavelength of 837.957 nm (as measured with a HighFinesse WS-6 Fizeau interferometer wavelength meter) to produce UV output near 389.95 nm, which was used to excite the $Q_1(6.5)$ transition of the B–X (0, 0) band of the CH radical. An additional approach of frequency-doubling the idler output (780-nm seed laser) directly to generate 390 nm was also attempted, yielding approximately the same UV pulse energy as the 615 + 1064 nm output. Figure 2 shows a typical set of 10-pulse oscilloscope traces at 1064, 355, 615, and 390 nm obtained with 100 μs spacing (10-kHz repetition rate). Note that the burst traces shown here were obtained with a relatively low sampling rate oscilloscope that required the detector output to be deliberately broadened in time using a load resistor and the intrinsic capacitance of the BNC cables. The pulses are actually 6–10 ns in temporal width as determined using a higher resolution oscilloscope. The average pulse energies were 130, 40, 4, and 0.4 mJ, with pulse-to-pulse variations of less than 7%, 10%, 15%, and 18% for the 1064, 355, 615, and 390 nm output, respectively. These conditions represent conversion efficiencies of 31%, 10%, and 10% for 1064 + 532 nm = 355 nm, 838 nm − 355 nm = 615 nm, and 1064 + 615 nm = 390 nm, respectively. The OPO conversion efficiency is a little lower than that reported previously by the same authors [19].

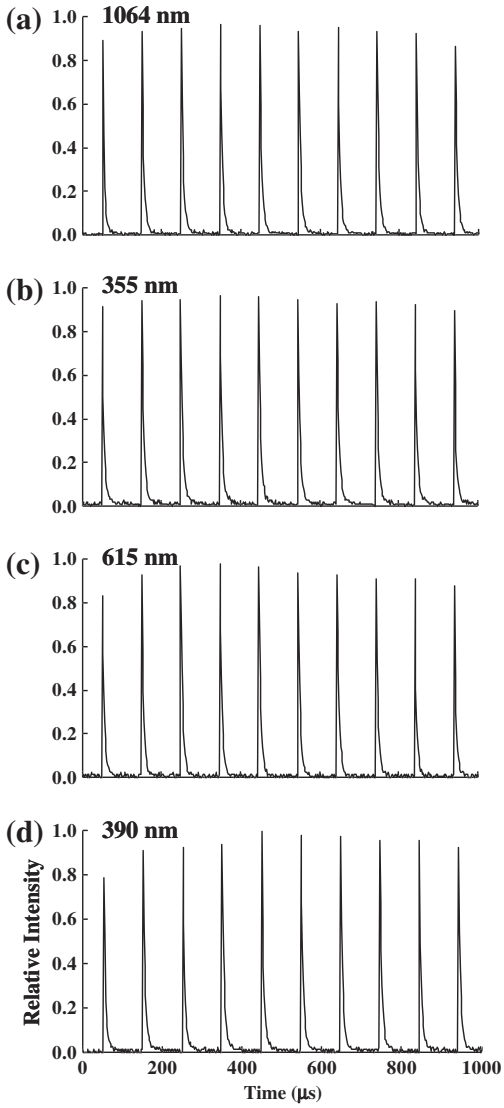

Fig. 2. Typical sets of 10-pulse laser burst traces of (a) 1064 nm, (b) 355 nm, (c) 615 nm, and (d) 390 nm operating at 10 kHz. Intensity variations are less than 7%, 10%, 15%, and 18%, respectively.

As shown in Fig. 1b, the burst of 390-nm pulses are transmitted through a −25 mm cylindrical lens and a +200 mm spherical lens to form a 50 mm × 0.2 mm laser sheet that passes through the center of the turbulent flame. The CH PLIF image sequences (fluorescence emission from the B–X(0, 1), A–X(1, 1), and A–X(0, 0) bands near 430 nm) were captured using a high-framing rate Princeton Scientific Instruments PSI-IV intensified CCD camera (160 × 160 pixels) coupled to a 85 mm, f/1.4 visible camera lens. The intensifier gate was set to 50 ns and the intensifier was operated at 95% of the maximum gain.

2.3. Turbulent flame conditions

The turbulent non-premixed flame considered in this study (DLR Flame A) is a simple jet-flame that serves as a benchmark flame in the TNF workshop [20]. The fuel, which consists of 22.1% CH_4/33.2% H_2/44.7% N_2, issues from a 0.8-cm-diameter tube at 42.2 m/s into a 30 cm × 30 cm co-flowing stream of air at 0.7 m/s. This condition corresponds to a Reynolds number of 15,200 based on nozzle diameter and the stoichiometric mixture fraction for this fuel composition is 0.167. The fuels are supplied via compressed gas cylinders which are metered with calibrated digital mass flow controllers (±3%) and the co-flowing air is supplied by a continuously-operating blower, which entrains the surrounding room air. The co-flowing air stream passes through a series of filters and flow conditioning including a HEPA filter to remove the majority of particulates from the flow, a series of perforated plates to create a uniform air distribution, and a two-inch thick sheet of honeycomb to achieve laminar flow conditions at the co-flow exit. Previously, CH PLIF images have been acquired in DLR Flame A by Bergmann et al. [21] using conventional low-repetition rate imaging.

3. Results and discussion

Figure 3 shows an example of a 10-frame CH PLIF image sequence with 100-μs spacing between successive images, corresponding to a 10-kHz acquisition rate. The images were taken on centerline and at 175 mm above the fuel tube as indicated by the solid box on the flame photograph on the right. The field-of-view for each image is 40 mm × 45 mm, with a camera spatial resolution of approximately 300 μm per pixel. While it may appear that the signal-to-noise ratio (SNR) is somewhat modest for these images, it should be noted that CH concentrations in these flames are rather low (a few ppm) and that the images were taken with only 0.4 mJ/pulse of 390-nm laser energy; conventional low-repetition rate imaging of CH using PLIF diagnostics typically is achieved with tens of mJ/pulse of laser energy. Figure 4 shows two intensity profiles taken horizontally from image 5 of the CH PLIF sequence shown in Fig. 3 at the axial location specified with the two dashed lines. The SNR of the CH PLIF image at both of these axial locations is approximately seven. It is remarkable that the SNR for these images is as high as it is considering the low 390-nm pulse energies. This fact highlights the utility in this study of operating the OPO in an injection-seeded mode with a narrow linewidth, allowing high laser spectral intensities ($\sim 6 \times 10^7$ W/cm^2/cm^{-1}) with low pulse energies. Of course, very narrow laser sources may lead to spectral intensities that saturate the transition of interest in a manner

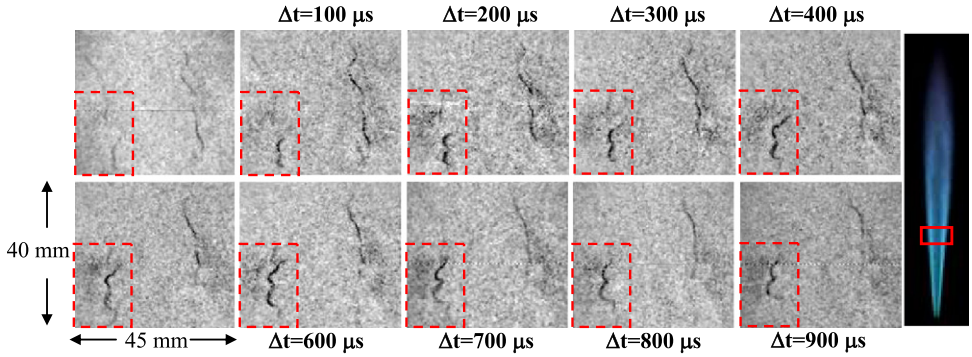

Fig. 3. A 10-frame CH PLIF image sequence in DLR Flame A at an axial position of 175 mm downstream of burner exit. The spacing between the images is 100 μs, corresponding to a 10-kHz acquisition rate. Note: the dashed reference box is fixed; relative movement of the CH layer with respect to the box highlights the flame dynamics. Flow is from bottom to top.

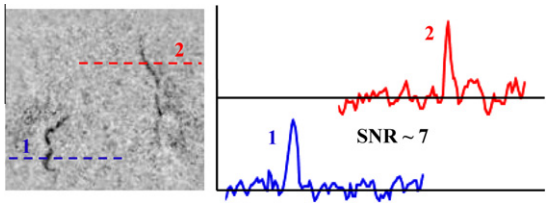

Fig. 4. Intensity profiles from image 5 of the CH PLIF image sequence. Locations of the intensity profiles are indicated with dashed lines. The signal-to-noise ratio (SNR) of the CH PLIF layers is approximately seven for specified locations.

such that further increases in laser pulse energy will not lead to an increase in emitted fluorescence signal. This aspect is not investigated in the current paper and will be a source of future study.

Signal levels aside, Fig. 3 demonstrates an example of the first multi-frame CH PLIF image sequences captured in a turbulent flame. From this image sequence, notable features of the flame dynamics are observed. As an example, the CH radical layer (i.e., the "reaction zone") in this image sequence is convected at a speed of more than twice the local mean gas velocity. Using the dashed box in the lower left corner of the images in Fig. 3 as a fixed reference, it is seen that the CH layer moves on the order of 9 mm in 800 μs (frames 2–10), corresponding to a convective velocity of approximately 13 m/s. Using the velocity data taken from [22], the mean centerline velocity at this axial position is approximately 32 m/s for DLR Flame A. For turbulent jet-flames, which are self similar, it has been shown that it is reasonable to assume that the mean velocity on the CH layer (i.e., the "stoichiometric velocity") can be approximated as $u_s(r,x) = U_c(x)\xi_s$, where $U_c(x)$ is the local centerline velocity and ξ_s is the stoichiometric mixture fraction [2,23]. For DLR Flame A at 175 mm downstream of the burner, u_s is calculated to be 5.3 m/s. Thus, an in-plane convective velocity of 13 m/s is almost three times the expected mean value of the local gas velocity. The mechanism for this high convective speed, whether acceleration due to gas expansion or turbulence-induced motion, is not known currently. Additional simultaneous temperature or velocity measurements in future studies will greatly benefit the analysis.

High-speed CH PLIF diagnostics also will be very useful for examining local flame extinction and re-ignition processes. As an example, consider the short CH PLIF image sequence shown in Fig. 5. It appears that this sequence has captured the thinning and extinction of a CH layer due to intense flame "wrinkling". Most likely a strong turbulent eddy has induced significant strain on the CH layer causing it fold in upon itself and ultimately extinguish. However, possible out-of-plane motion dictates that careful analysis is needed and multiple 2D/3D diagnostic methods may be needed to properly interpret flame dynamics, especially that of extinction and re-ignition. From the high-speed CH PLIF imaging alone, it is not certain that the CH layer is not intact and has not simply moved out of the plane of the laser sheet. These types of dynamics were observed quite frequently in a recent study by Boxx et al. [9] using simultaneous PIV and OH PLIF at 1.5 kHz.

Finally, it is noted the SNR of the high-speed CH PLIF imaging may be increased with rela-

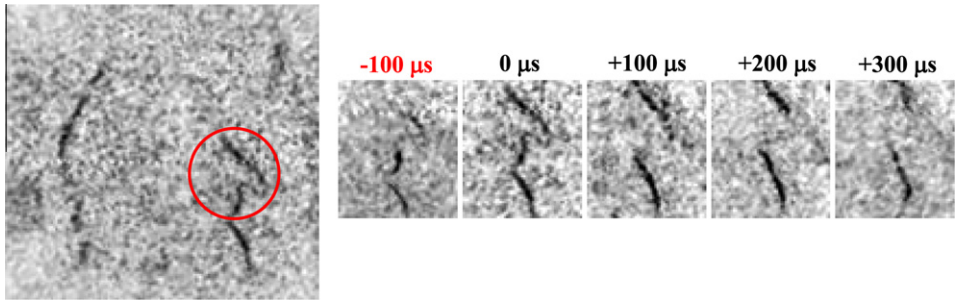

Fig. 5. Example CH PLIF image sequence highlighting possible extinction due to flame wrinkling.

tively straightforward modifications to the laser system. As mentioned previously, the pulse burst system is capable of generating greater than 400 mJ/pulse at 1064 nm, whereas only 130 mJ/pulse was used for the present study. This lower level of output was used to avoid damaging the BBO crystals within the OPO. However, larger second and third harmonic crystals and BBO crystals with four times the cross-sectional area of that presently used would allow us to expand the 355-nm pump beam and use the full output of the pulse burst laser. Assuming that the conversion efficiency to 355 nm remains constant (or possibly increases), more than a factor of three increase in the 355-nm laser energy would be expected. In Ref. [19], the authors showed that the conversion efficiency of the output of the signal beam from the OPO was dependent on 355-nm pump energy. Assuming a similar trend and the factor of three increase in 355-nm laser energy, it can be expected that the conversion efficiency of $838 - 355\ \text{nm} = 615\ \text{nm}$ can be increased to ~20%. Both of these factors would lead to more than six times more laser energy at 390 nm, assuming that the efficiency of the sum-frequency mixing of $1064 + 615\ \text{nm} = 390\ \text{nm}$ remains constant. However, it is likely that this conversion efficiency would increase as well to possibly 15–20%. In either case, it is expected that laser pulse energies of 2–3 mJ/pulse could be achieved at 390 nm with small modifications to the OPO, resulting in a significant increase in both CH PLIF signal and SNR.

4. Summary and conclusions

This paper has presented the first multiple-frame high-speed imaging of the CH radical in turbulent flames using PLIF diagnostics. Using the pulse burst laser at OSU, a custom injection-seeded optical parametric oscillator (OPO) is pumped at 355 nm to generate a burst of single-frequency laser pulses at 615-nm. This pulse train is sum-frequency mixed with residual 1064-nm output from the pulse burst laser to generate a series of 390-nm laser pulses used for exciting B–X transition of CH. We have demonstrated the ability to image CH layers at a 10-kHz repetition rate with adequate signal-to-noise ratios (SNR ~7). High-speed CH PLIF image sequences are achieved with only 0.4 mJ/pulse at 390 nm due to the higher laser spectral intensities achieved by injection seeding the OPO for single-frequency output at 615 and 390 nm.

Example 10-kHz image sequences were presented that showcased both flame dynamics and transient phenomena such as flame extinction. As an example, one CH PLIF sequence highlighted an unexpected high convective velocity of an isolated CH layer, while another CH PLIF sequence conveyed possible flame extinction due to intense flame wrinkling. Both of these features cannot be tracked with conventional low-repetition rate diagnostics. Finally, a simple strategy for increasing the CH PLIF signals and SNR is presented, which consists of obtaining larger second and third harmonic and OPO crystals such that the full output capacity of the pulse burst laser may be utilized. Future work will entail optimizing the high-speed CH PLIF diagnostics for real-time, multi-dimensional tracking of the primary reaction zones in turbulent non-premixed flames.

Acknowledgements

The authors acknowledge partial financial support for this work from AFOSR Grant FA9550-09-1-0272 (Julian Tishkoff, Technical Monitor). Previous financial support for the development of the high-framing rate imaging system was supplied by NASA (Paul Danehy, Technical Monitor), AFRL, (James Gord, Technical Monitor), AFOSR (John Schmisseur, Technical Monitor), and Princeton Scientific Instruments.

References

[1] J.M. Donbar, J.F. Driscoll, C.D. Carter, *Combust. Flame* 122 (1–2) (2000) 1–19.
[2] J.M. Donbar, J.F. Driscoll, C.D. Carter, *Combust. Flame* 125 (4) (2001) 1239–1257.

[3] K.A. Watson, K.M. Lyons, C.D. Carter, J.M. Donbar, *Proc. Combust. Inst.* 29 (2) (2002) 1905–1912.
[4] M. Tanahashi, S. Taka, M. Shimura, T. Miyauchi, *Exp. Fluids* 45 (2008) 323–332.
[5] C. Kittler, A. Dreizler, *Appl. Phys. B* 89 (2007) 163–166.
[6] I. Boxx, C. Heeger, R. Gordon, B. Bohm, A. Dreizler, W. Meier, *Combust. Flame* 156 (1) (2009) 269–271.
[7] I. Boxx, M. Stohr, C. Carter, W. Meier, *Appl. Phys. B* 95 (1) (2009) 23–29.
[8] B. Bohm, C. Heeger, I. Boxx, W. Meier, A. Dreizler, *Proc. Combust. Inst.* 32 (2) (2009) 1647–1654.
[9] I. Boxx, C. Heeger, R. Gordon, et al., *Proc. Combust. Inst.* 32 (1) (2009) 905–912.
[10] W. Paa, W. Muller, M. Stafast, W. Treibel, *Appl. Phys. B* 86 (2007) 1–5.
[11] C.F. Kaminski, J. Hult, M. Alden, *Appl. Phys. B* 68 (4) (2000) 757–760.
[12] C.F. Kaminski, J. Hult, M. Alden, et al., *Proc. Combust. Inst.* 28 (1) (2000) 399–405.
[13] J. Hult, U. Meier, W. Meier, A. Harvey, C.F. Kaminski, *Proc. Combust. Inst.* 30 (1) (2005) 701–709.
[14] J. Sjoholm, E. Kristensson, M. Richter, M. Alden, G. Gortiz, K. Knebel, *Meas. Sci. Technol.* 20 (1) (2009) 025306–025312.
[15] P. Wu, W.R. Lempert, R.B. Miles, *AIAA J.* 38 (2000) 672–679.
[16] B.S. Thurow, N.B. Jiang, M. Samimy, W.R. Lempert, *Appl. Opt.* 43 (26) (2005) 5064–5073.
[17] B.S. Thurow, A. Satija, K. Lynch, *Appl. Opt.* 48 (2009) 2086–2093.
[18] J.D. Miller, M. Slipchenko, T.R. Meyer, N. Jiang, W.R. Lempert, J.R. Gord, *Opt. Lett.* 34 (9) (2009) 1309–1311.
[19] N. Jiang, W.R. Lempert, G.L. Switzer, T.R. Meyer, J.R. Gord, *Appl. Opt.* 47 (1) (2008) 64–71.
[20] R.S. Barlow, International Workshop on Measurement and Computation of Turbulent Nonpremixed Flames, available at http://www.ca.sandia.gov/TNF/abstract.html.
[21] V. Bergmann, W. Meier, D. Wolff, W. Stricker, *Appl. Phys. B* 66 (4) (1998) 489–502.
[22] C.H. Schneider, A. Dreizler, J. Janicka, E.P. Hassel, *Combust. Flame* 135 (2003) 185–190.
[23] D. Han, M.G. Mungal, *Combust. Flame* 132 (3) (2003) 565–590.